Semester Project Report

AUTOMATED OBJECT SORTING CONVEYOR SYSTEM

MCT-236L – Embedded Systems-I Lab
(Spring-2025)

Submitted on **16 May 2025**

Submitted by: **Group #: 05B**

Group Members:

- **M Talha Naseem (2023-MC-48)**
- **M Haseeb Rehan (2023-MC-49)**
- **Abdullah Amer (2023-MC-58)**

Submitted to: **Engr. Shujat Ali**

Department of Mechatronics and Control Engineering
University of Engineering and Technology,

TABLE OF CONTENTS:

Contents

"INTRODUCTION" 2

"COMPONENT ANALYSIS" 3

1. Microcontroller (Tiva C Series TM4C123GH6PM): 3
2. Infrared (IR) Sensors: 3
3. Push Button (Emergency Stop): 4
4. LCD Display (16x2 Alphanumeric): 5
5. NEMA 17 Stepper Motor: 5
6. TB6600 Stepper Motor Driver: 6
7. 12V 3A Adapter: 7
8. Potentiometer: 7
9. Resistors: 7
10. Jumper Wires: 8
11. PCB Design: 8
12. Wooden Structure: 8
13. Conveyor Belt: 9
14. Bearings: 9
15. Mechanical Sorting (Angled Wooden Structure): 9
16. Nuts and Bolts: 9

"PINOUTS OF THE COMPONENTS" 10

"GPIO PINS USED" 12

"CIRCUIT DIAGRAM AND SCHEMATIC OF PCB" 13

FLOWCHART OF CODE LOGIC: 15

SCHEMATIC DIAGRAM: 16

"BILL OF MATERIALS" 17

"CONCLUSIONS" 22

"REFERENCES" 22

"CREDITS" 22

"INTRODUCTION"

- **Brief Overview:**

  - An Automatic Conveyor System is an intelligent, embedded solution designed to streamline material handling processes by integrating mechanical transport mechanisms with sensor-based decision-making and microcontroller-driven control. This semester project, part of the MCT-236L Embedded Systems-I Lab, focuses on designing and developing a functional prototype that can automatically detect, measure, and sort objects of different heights on a conveyor belt. By utilizing the TIVA C Series LaunchPad, proximity sensors, and appropriate actuator control, the system demonstrates the practical application of embedded systems in solving real-world industrial automation challenges. Through this hands-on experience, our aim is to bridge theoretical knowledge with practical engineering implementation, fostering a deeper appreciation of how embedded systems enable automation in manufacturing, packaging, and logistics industries.

- **Applications:**

  - **Consumer Electronics**: Used for controlling DVD players, projectors, televisions, and set-top boxes.
  - **Presentation Tools**: Enables users to operate projectors for seamless presentations in business or educational settings.
  - **Home Entertainment Systems**: Facilitates control of media systems, including playback, volume adjustments, and input switching.
  - **Appliance Control**: Integrated with various devices like sound systems and home theater equipment.
  - **Custom Electronics**: Adapted for use in DIY projects and prototypes requiring basic wireless control functionality

“COMPONENT ANALYSIS”

1. Microcontroller (Tiva C Series TM4C123GH6PM):

- **Description:** A 32-bit ARM Cortex-M4 based microcontroller with a wide range of digital and analog peripherals for embedded applications.
- **Role:** Serves as the central processing unit of the system, reading input signals from IR sensors and push buttons, processing logic, and controlling output devices like the LCD and stepper motor.
- **Interaction:** Interfaces with IR sensors, push button, LCD display, and stepper motor driver to manage the entire conveyor and sorting system operation.

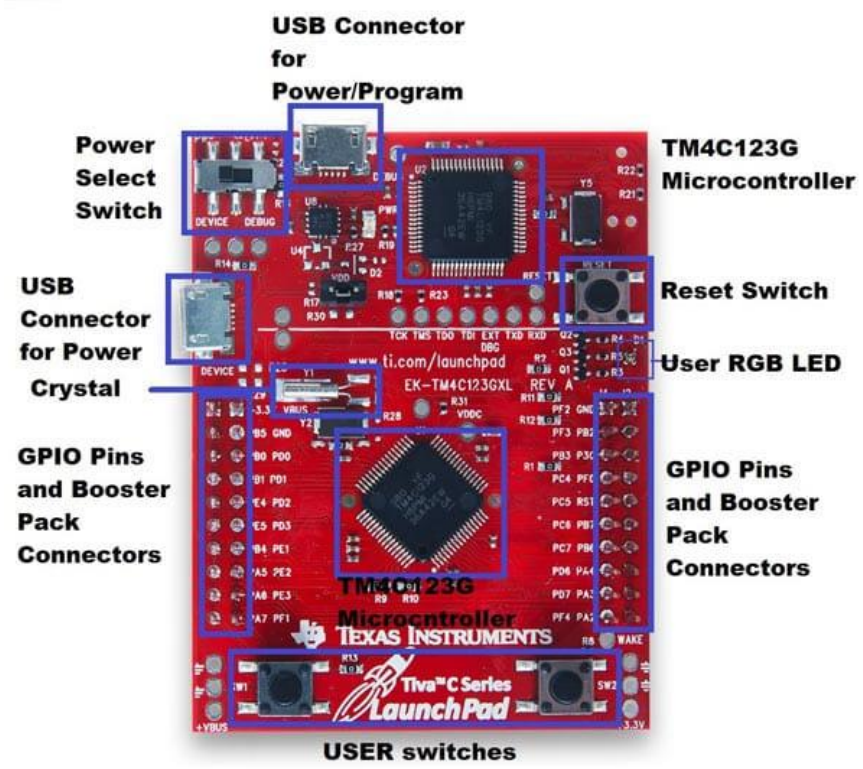

TIVA 4c123gh6pm

2. Infrared (IR) Sensors:

- **Description:** Optical sensors that detect the presence of objects based on the reflection of infrared light.

- **Role:** Detect objects at different positions on the conveyor for counting and sorting, and at the conveyor start for overload detection.
- **Interaction:** Connected to digital input pins of the microcontroller, triggering counting or overload logic upon object detection.

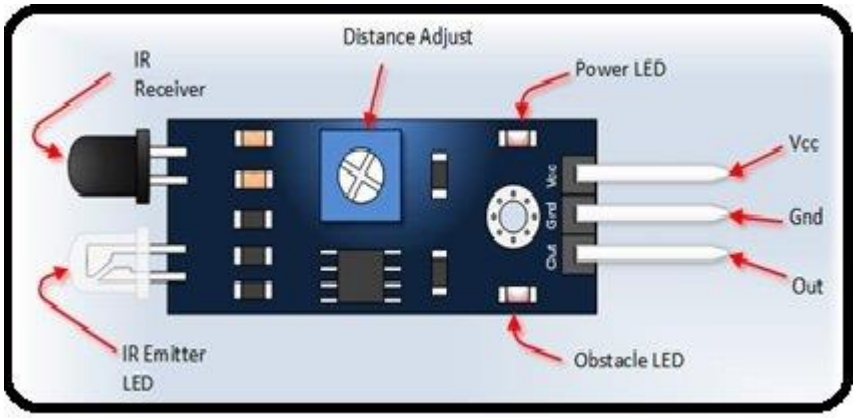

IR Sensor

3. **Push Button (Emergency Stop):**

- **Description:** A mechanical switch used to manually interrupt system operation.
- **Role:** Acts as an emergency stop control that toggles the conveyor's running state when pressed.
- **Interaction:** Connected to a digital input pin of the microcontroller; when pressed, it updates a flag that disables or resumes the motor control.

Push Button

4. LCD Display (16x2 Alphanumeric):

- **Description:** A character display module used to visually present information to users.
- **Role:** Displays the number of boxes detected by each sensor and the operational status of the conveyor (e.g., working, emergency stop, overloaded).
- **Interaction:** Driven by the microcontroller through parallel data pins and control lines for real-time updates.

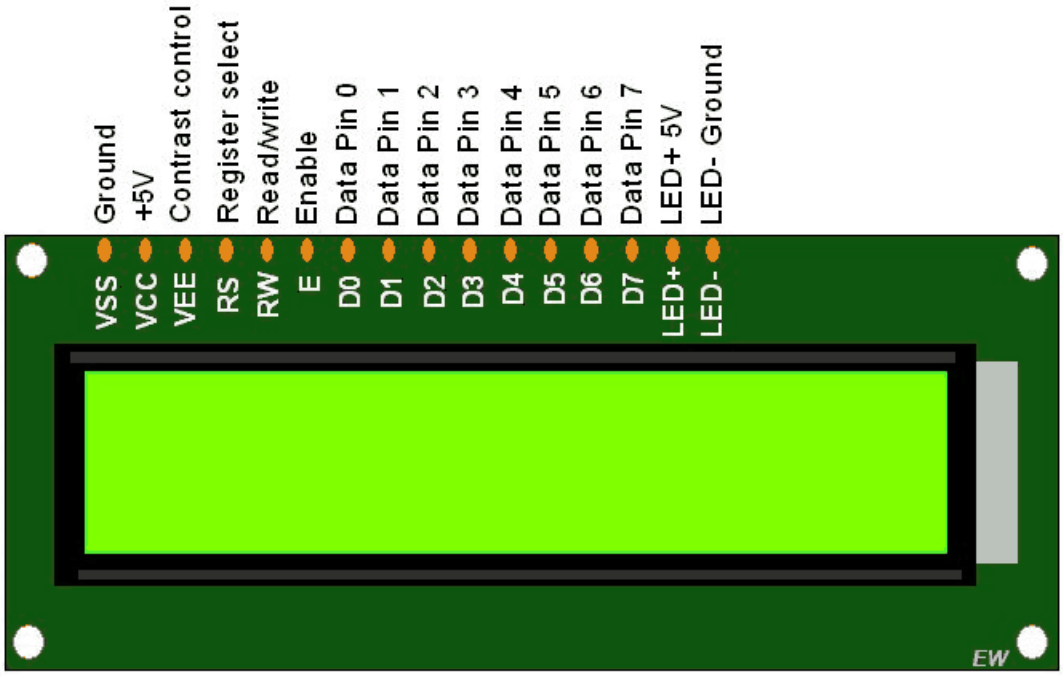

LED *16x2*

5. NEMA 17 Stepper Motor:

- **Description:** A high-torque bipolar stepper motor commonly used in precision motion applications.
- **Role:** Powers the conveyor belt by rotating a shaft incrementally based on pulse input.
- **Interaction:** Receives step and direction signals from the microcontroller via the TB6600 driver for movement control.

Nema 17 Stepper Motor

6. TB6600 Stepper Motor Driver:

- **Description:** A stepper motor driver capable of handling high current loads and providing microstepping functionality.
- **Role:** Translates low-power step and direction signals from the microcontroller into high-power outputs that drive the NEMA 17 motor.
- **Interaction:** Connected to the microcontroller's output pins and motor power supply to control stepper motor movement.

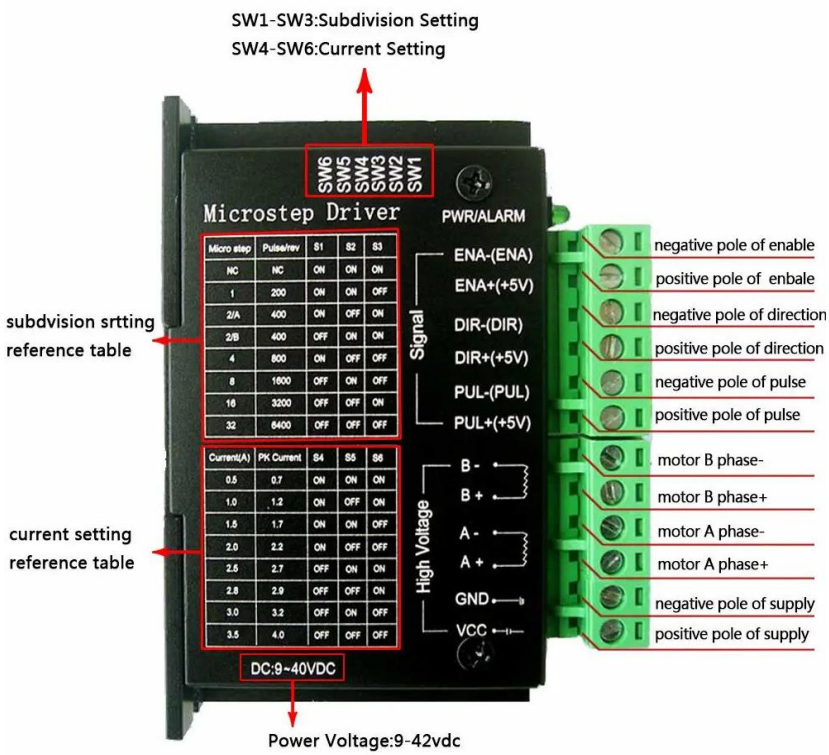

tb6600 Motor Driver

7. 12V 3A Adapter:

- **Description:** A regulated DC power supply that provides 12 volts at up to 3 amps.
- **Role:** Supplies power to the stepper motor and TB6600 driver.
- **Interaction:** Connected directly to the power terminals of the motor driver to provide stable motor operation.

8. Potentiometer:

- **Description:** A variable resistor used to adjust voltage or current manually.
- **Role:** Can be used for calibration or adjusting sensitivity for LCD display.
- **Interaction:** If used, it connects to an analog input pin on the microcontroller for tuning purposes.

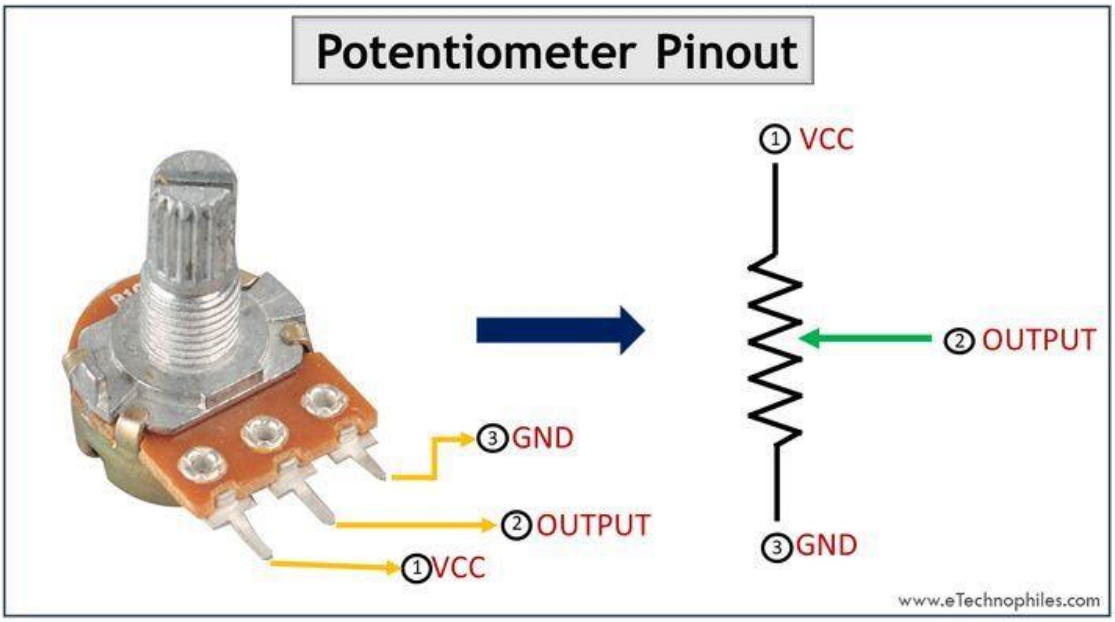

Potentiometer

9. Resistors:

- **Description:** Passive electrical components that limit current or divide voltage.
- **Role:** Used for pull-up/pull-down configurations or to limit current in input circuits.

- **Interaction:** Placed in series or parallel with buttons and sensors for reliable signal processing.

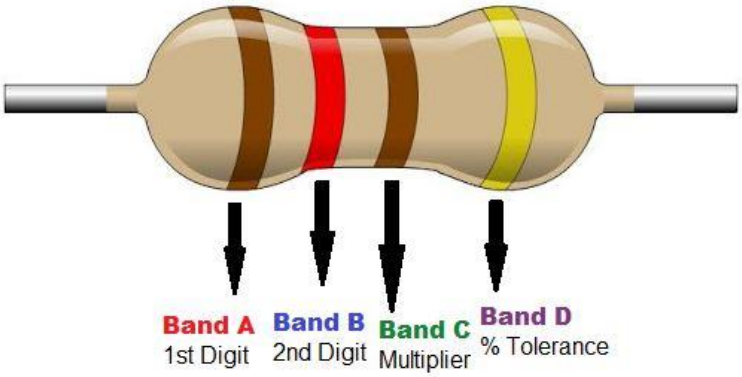

Resistor

10. Jumper Wires:

- **Description:** Flexible wires used for making temporary electrical connections.
- **Role:** Connect various electronic components on the breadboard or PCB.
- **Interaction:** Provide signal and power paths between the microcontroller, sensors, display, and motor driver.

11. PCB Design:

- **Description:** A printed circuit board fabricated for neat and reliable electrical connections.
- **Role:** Organizes and supports electronic components for robust project assembly.
- **Interaction:** Houses soldered connections for microcontroller, IR sensors, buttons, and motor control wiring.

12. Wooden Structure:

- **Description:** A rigid framework made of wood to house and support mechanical components.
- **Role:** Forms the physical base and frame of the conveyor system.

- **Interaction:** Provides mechanical stability and alignment for the belt, motor, and sorting components.

13. Conveyor Belt:

- **Description:** A looped flexible surface driven by the motor for object transport.
- **Role:** Carries boxes along the sorting path.
- **Interaction:** Rotated by the motor and supported by bearings, allowing objects to be sensed and sorted.

14. Bearings:

- **Description:** Mechanical elements that reduce friction and guide rotational movement.
- **Role:** Support the shaft and pulley system of the conveyor.
- **Interaction:** Enable smooth movement of the conveyor rollers connected to the stepper motor.

15. Mechanical Sorting (Angled Wooden Structure):

- **Description:** A physically angled wooden divider that redirects boxes based on size or position.
- **Role:** Performs the actual sorting task as boxes move along the conveyor.
- **Interaction:** Fixed near the end of the conveyor to guide objects into respective bins based on timing.

16. Nuts and Bolts:

- **Description:** Fasteners used to assemble and secure mechanical parts.
- **Role:** Join together the wood structure, bearings, and motor mountings.
- **Interaction:** Provide rigid and stable attachment throughout the mechanical system.

“PINOUTS OF THE COMPONENTS”

1. Stepper Motor Control:

- **STEP_PIN:** PD1
  - Configured as an output to generate step pulses for the TB6600 motor driver. Used at PUL
- **DIR_PIN:** PD0
  - Controls the direction of the stepper motor rotation.

These two pins are connected directly to the **TB6600 stepper motor driver**'s STEP and DIR input terminals.

2. Infrared (IR) Sensors:

- **IR_SENSOR_A:** PE0
  - Detects objects for count A.

- **IR_SENSOR_B:** PE1
  - Detects objects for count B.

- **IR_SENSOR_C:** PE2
  - Detects objects for count C.

- **IR_OVERLOAD:** PE3
  - Detects if an object is stuck or blocking the end of the conveyor (overload condition).

Each IR sensor has its **output connected to the assigned PE pin**, configured with INPUT_PULLUP in the code.

3. Emergency Stop Push Button:

- **EMERGENCY_BUTTON:** PC4
  - Acts as a toggle input to start/stop the conveyor motor.
  - Connected via an **external pull-down resistor** to ensure stable logic levels.

4. LCD Display (16x2):

The LCD uses 4-bit mode and is connected to the following pins of the microcontroller:

LCD Pin	Function	Tiva Pin
RS	Register Select	PB0
EN	Enable	PB1
D4	Data bit 4	PB2
D5	Data bit 5	PB3
D6	Data bit 6	PB4
D7	Data bit 7	PB5

These are defined using the LiquidCrystal library for control and data transfer.

5. Power Supply Connections:

- **IR sensors, LCD, TB6600 driver control pins, and logic components** use the **3.3V or 5V regulated output** from the Tiva C LaunchPad .
- **TB6600 Stepper Motor Driver and NEMA 17 motor** are powered via an external **12V 4A adapter**, connected directly to the motor power terminals.

"GPIO PINS USED"

- Total no of GPIO pins used are 17.
- **LCD**:

Pins of Lcd	Corresponding GPIO Pins
RS	PB0
E	PB1
DB4	PB2
DB5	PB3
DB6	PB4
DB7	PB5

- **SERVO MOTOR**:

Pins of Servo	Corresponding GPIO Pins
Output 1	PD2
Output 2	PD3

- **STEPPER MOTOR**:

Pins of Stepper	Corresponding GPIO Pins
Dir+	PD0
Pul+	PD1

- **IR SENSORS**:

Pins of IR Sensor	Corresponding GPIO Pins
Output 1	PE0
Output 2	PE1
Output 3	PE2
Output 4	PE3

- **EMERGENCY BUTTON**:

Pin of button	Corresponding GPIO Pins
Output	PC4

- **ON-BOARD LEDs**:

LED	Corresponding GPIO Pins
Red	PF1
Blue	PF2

“CIRCUIT DIAGRAM AND SCHEMATIC OF PCB”

Circuit Diagram:

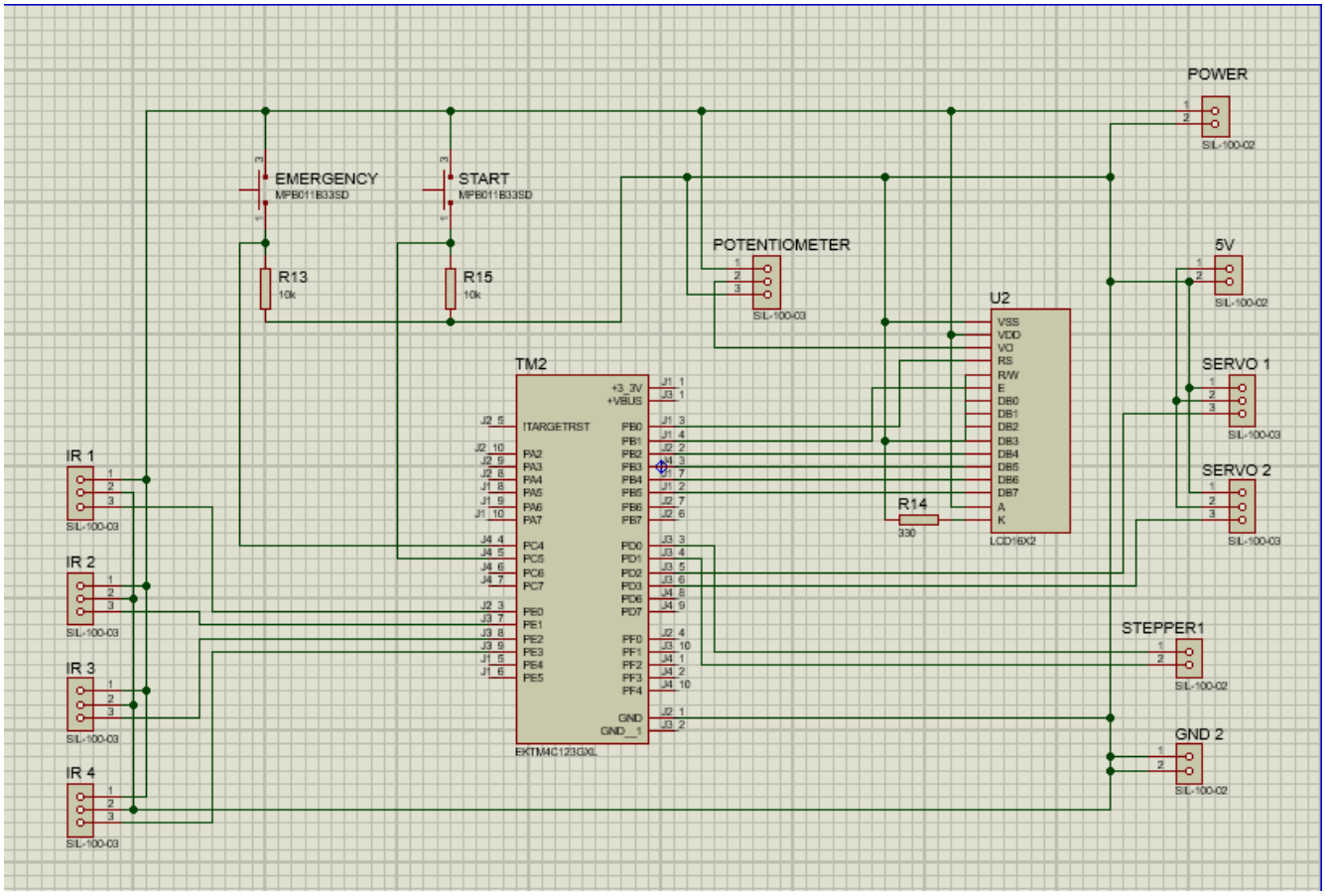

Figure 1

Schematic of PCB:

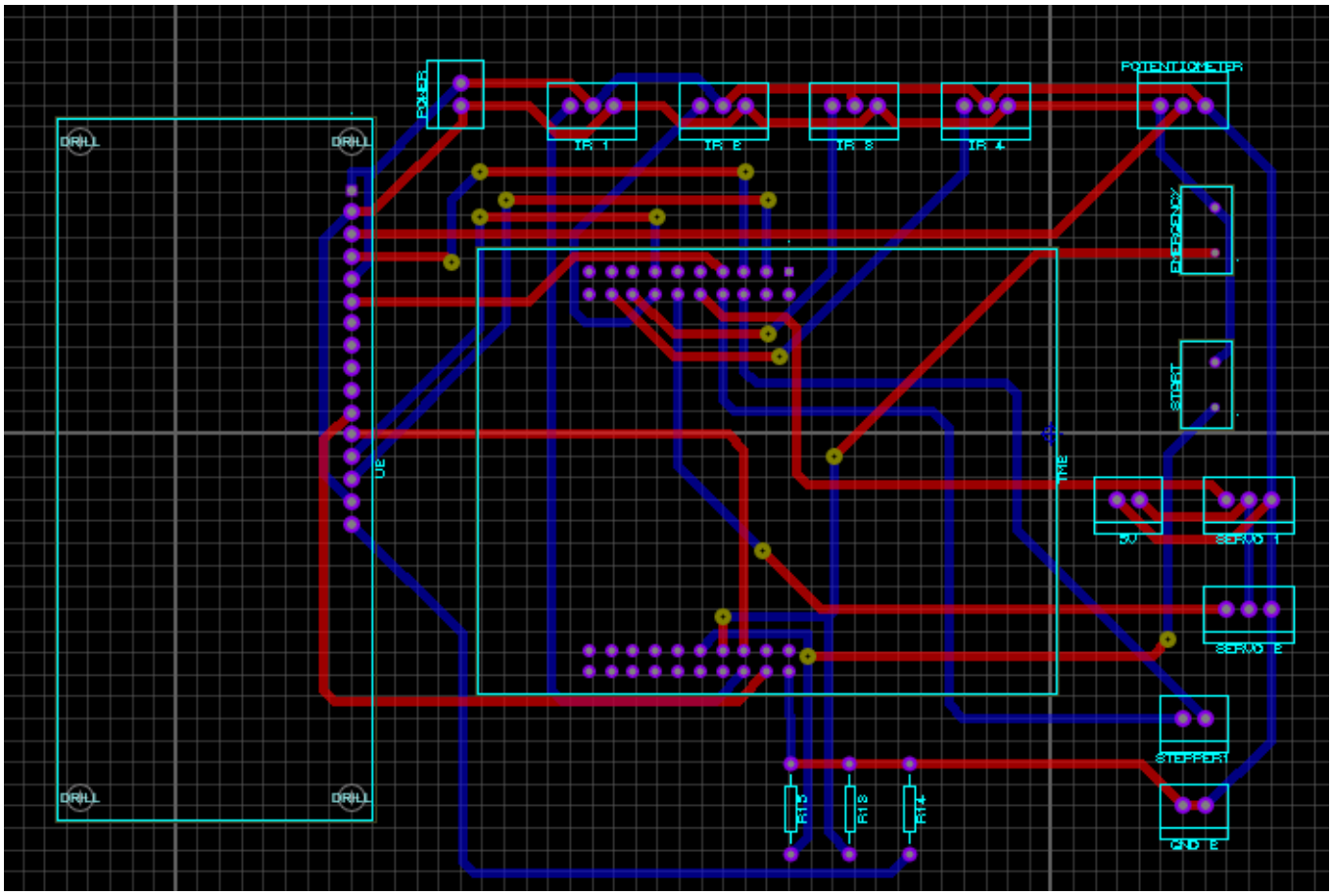

FLOWCHART OF CODE LOGIC:

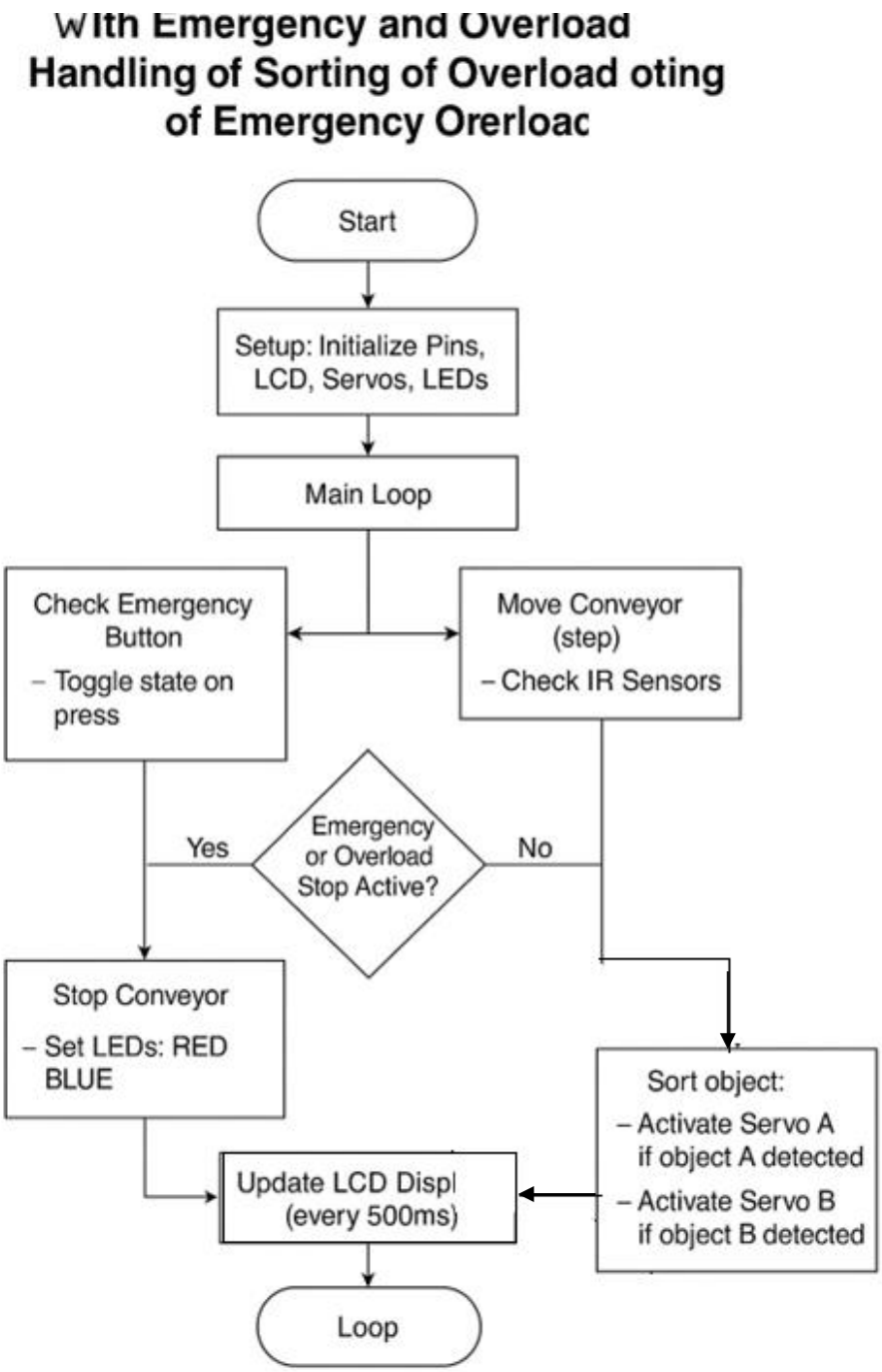

SCHEMATIC DIAGRAM:

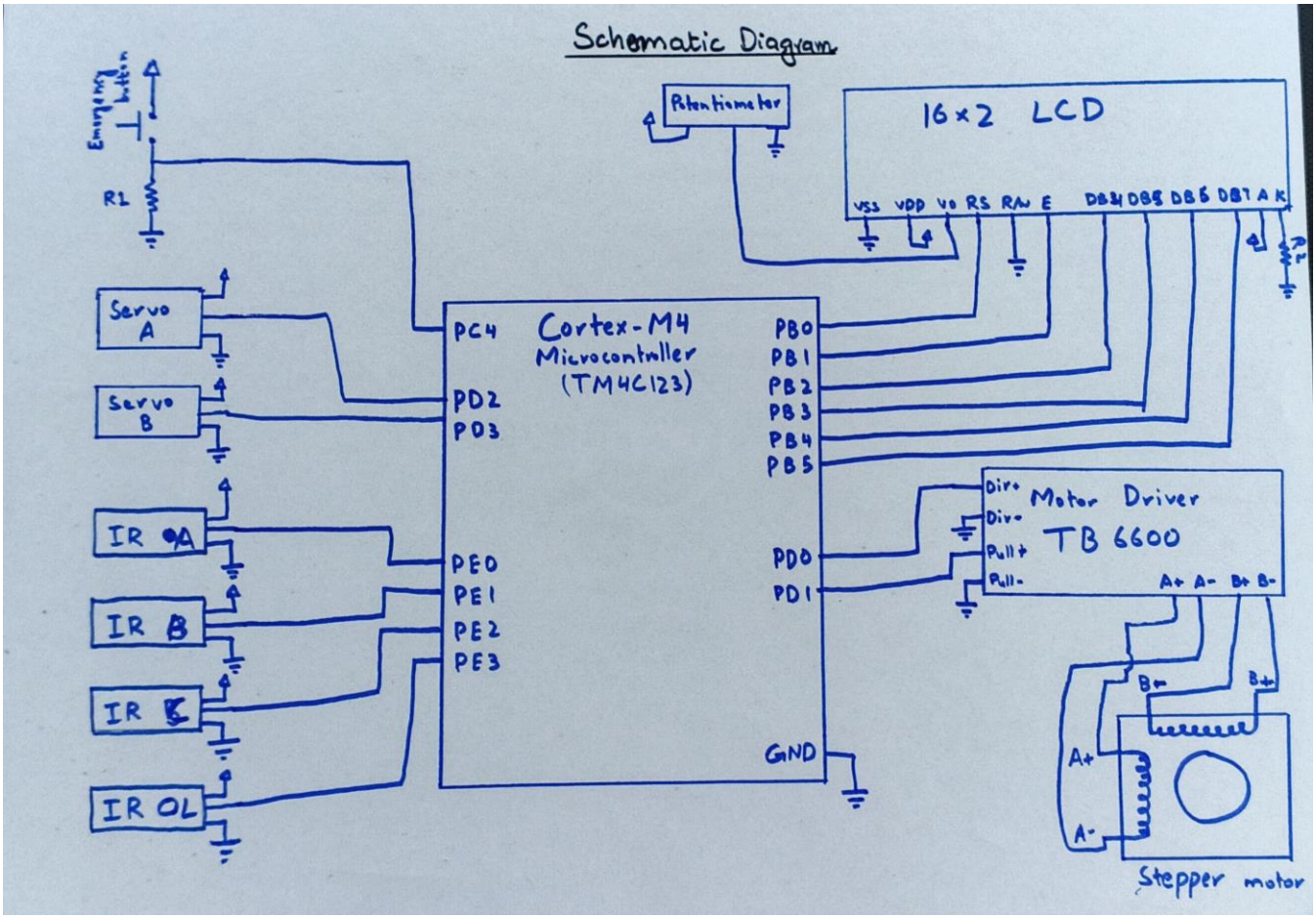

“BILL OF MATERIALS”

Sr.No	COMPONENT	DESCRIPTION	MODEL	QUANTITY	PRICE	VENDOR	CONTACT	WEBSITE
1	Microcontroller (Tiva C Series)	A 32-bit ARM Cortex-M4 based microcontroller	TM4C123GH6PM	1	9000	Electronic Solution, Hall Road	0321 9469829	https://www.electronicsolution.pk/
2	Infrared Sensor	Sensor with 850–950 nm wavelength, 2–80 cm range, 2-3V operating	LM393	4	600	IC Shop, Hall Road	0322 4401074	https://theicshop.pk/
3	Push Button	Tactile button, rated for 5–30 V operation.	BM16	1	40	IC Shop, Hall Road	0322 4401074	https://theicshop.pk/
4	LCD Display	16x2 alphanumeric LCD with HD44780 controller, 5 V operating voltage	1602 (16x2)	1	300			
5	Stepper Motor	NEMA 17 bipolar stepper motor, 12–24 V rated voltage and 1.2–2 A current.	NEMA 17	1	850	Electronic Solution, Hall Road	0321 9469829	https://www.electronicsolution.pk/
6	Motor Driver	Driver with microstepping 1/16 step, supports 8–35 V input and up to 2.5 A high-current.	TB6600 (4 Ampere)	1	1400	Digilog Electronics	3124002221	https://digilog.pk/
7	Adapter 1	DC power supply with 12 V output and a current of 4A.	12V, 4 Ampere	2	600			
8	Adapter 2	DC power supply with 8 V output and 3A current.	8V , 3 Ampere	2	600			
9	Potentiometer	Rotary potentiometer and 10 kΩ linear taper.	20KΩ	1	40	Digilog Electronics	3124002221	https://digilog.pk/
10	Resistors	10 kΩ resistance, linear taper, with a 0–25 V voltage range and 0.5 W.	330Ω, 10KΩ	3	30			
11	Jumper Wires	Flexible jumper wires with insulated PVC coating.	Nill	Bunch of Wires	300	IC Shop, Hall Road	0322 4401074	https://theicshop.pk/
12	PCB Design	Printed Circuit Board (PCB) with copper traces and FR4 material.	Double Sided	1	1750	Moon PCB, Hall Road	3234024338	N/A
13	Mechanical Hardware	Wooden base structure with metallic components, including shafts, ball bearings and fastening nuts.	N/A	1	1500	Malik Mueez (Senior 21 Session)	3229304593	N/A
14	Wood	For supporting the base and mounting IR sensors on it.	N/A	6.66 ft	800	Malik Furniture	3224373718	N/A
15	Nails	Used for assembling the wood.	N/A	20	20	Malik Furniture	3224373718	N/A
16	Wood Glue	Used to assemble the woods for sorting	N/A	1	150	Malik Furniture	3224373719	N/A
17	Servo Motor	SG90 motor with 9g torque, 0.1s/60° rotation speed, 4.8V operating voltage, and 180° rotation range.	SG 90	2	540	IC Shop, Hall Road	0322 4401074	https://theicshop.pk/
18	Power Module	5V with range of 6–36V, providing up to 2A current.	N/A	1	250	IC Shop, Hall Road	0322 4401074	https://theicshop.pk/
19	Coupler	5mm to 10mm	N/A	1	350	Malik kharadia	N/A	N/A
					Sum Total: 18,520 PKR			

SUBTOTAL: 18,520

- **RECIPTS:**

THE I.C. SHOP - SHARJAH ELECTRONICS

7- DATA MARKET, 16-A, HALL ROAD,
LAHORE 54000-PAKISTAN.
WWW.THEICSHOP.PK
PH: +92 423 723 0693 --- +92 423 711 0030
CELL: 0322-4401074 --- 0320-4636507

Cashier: CASHIER 02/05/2025
Invoice No : 30441 2:41PM
M/S: Cash Sales
Remarks:

Descriptions	Qty	Rate	Disc	Amnt
SG 90 SERVO MOTOR	4	250.00	0.00	1000.00
MALE TO FEMALE 10CM JUMPER WIRE	1	150.00	0.00	150.00

Total Rs. :	1150.00
Total Disc: Rs. :	0.00
Sub Total Rs. :	1150.00
Paid Rs. :	1150.00
Change Rs. :	0.00

Deals in all components & semiconductrs, test instruments, programmer ICs, arduino modules & fuel dispenser LEDs and other indusrial parts & instruments.
THANK YOU FOR VISITING

www.Ezi POS Solutions.com
Software Provide By: 0333-4471177

شفیع کیبلز اینڈ کونیکٹرز
عبدالعلیم
0340-4520186
0321-3217913
دوکان نمبر 5 داتا مارکیٹ ہال روڈ لاہور 042-37226809

تاریخ 28/4/25 نمبر 1509

نام

رقم	ریٹ	تفصیل	تعداد
30		ٹیپ	3
40		ٹی کے Dr	2
70	ٹوٹل		

نوٹ: سامان چیک کر کے لیں۔ بعد میں واپسی یا تبدیلی نہیں ہوگی۔

THE I.C. SHOP - SHARJAH ELECTRONICS

7- DATA MARKET, 16-A, HALL ROAD,
LAHORE 54000-PAKISTAN.
WWW.THEICSHOP.PK
PH: +92 423 723 0693 --- +92 423 711 0030
CELL: 0322-4401074 --- 0320-4636507

Cashier: CASHIER — 28/04/2025
Invoice No.: 30106 — 5:35PM
M/S: Cash Sales
Remarks:

Descriptions	Qty	Rate	Disc	Amnt
HEADER SINGEL MALE..	2	10.00	0.00	20.00
DC SOCKET FEMALE	1	10.00	0.00	10.00

Total Rs. :	30.00
Total Disc: Rs. :	0.00
Sub Total Rs. :	30.00
Paid Rs. :	30.00
Change Rs. :	0.00

Deals in all components & semiconductrs, test instruments, programmer ICs, arduino modules & fuel dispenser LEDs and other indusrial parts & instruments.
THANK YOU FOR VISITING

www.Ezi POS Solutions.com
Software Provide By: 0333-4471177

28-04-2025 5:28:22PM

MEKATRONIKS
Mechanics.Robotics.Electronics

www.Mekatroniks.com

Shop# 27 , 16A Hall Road Near Faysal BAnk
Regal Chowk Mall Road Lahore

0300-9429432

SALE

Inv#: 13548 Date: 28/Apr/2025
Type: CASH Wk#: 1
Cust Name: CASH SALES

S#	Item Name	Qty	Rate	Total
1	Female To Female 10cm	1	130.00	130

T Qty: 1.00 G Total 130
Discount: 0
Net Total 130

Goods Once Sold Will Not Be Returned O
Exchanged

Prepaired By: Mirza Soban

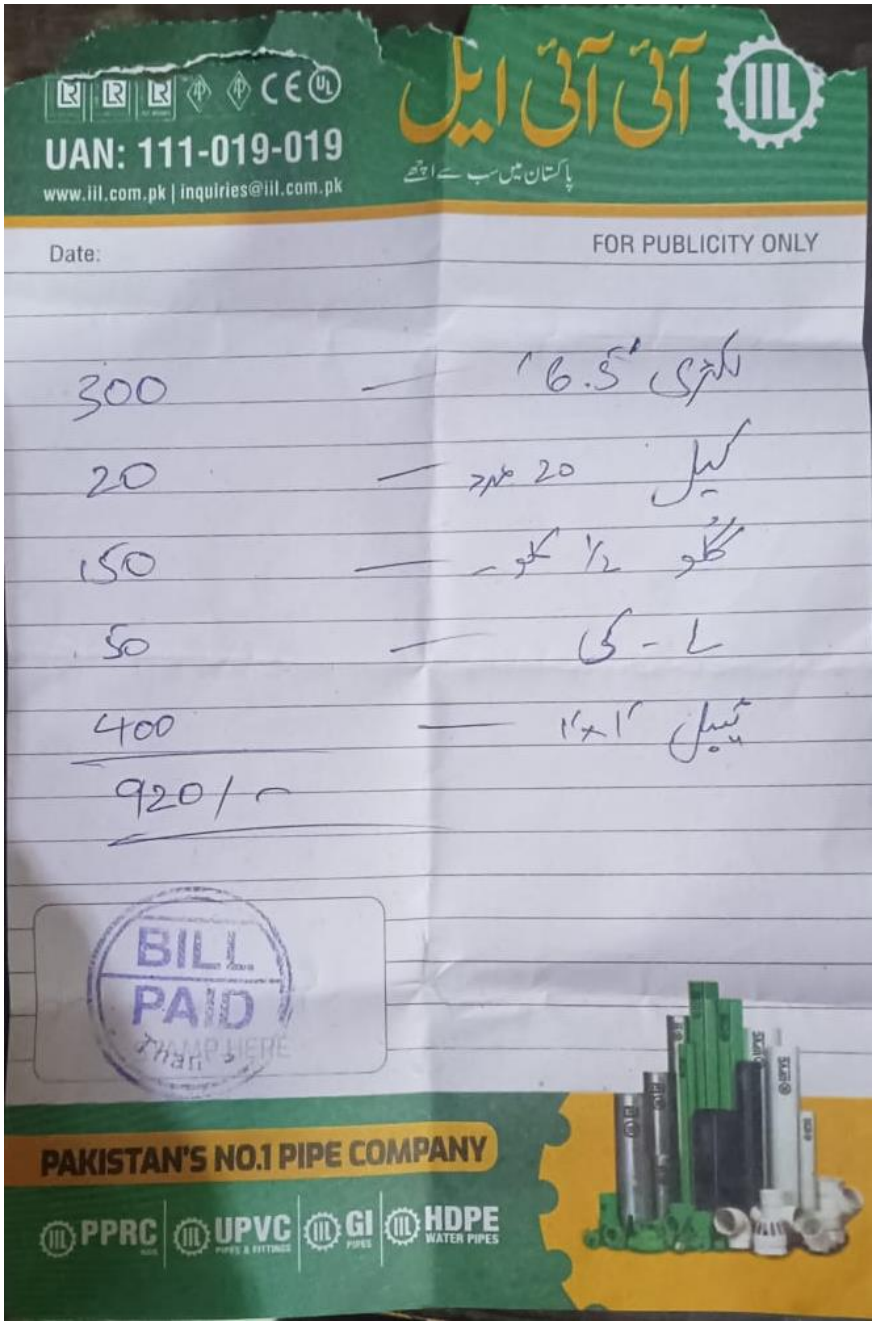

آئی آئی ایل

پاکستان میں سب سے اچھے

UAN: 111-019-019

www.iil.com.pk | inquiries@iil.com.pk

Date:

FOR PUBLICITY ONLY

300	—	لکڑی 6.5'
20	—	کیل 20 نمبر
150	—	گلو ½ کلو
50	—	L-کی
400	—	ٹیبل 1'×1'
920/-		

BILL PAID

PAKISTAN'S NO.1 PIPE COMPANY

PPRC | UPVC PIPES & FITTINGS | GI PIPES | HDPE WATER PIPES

DIGILOG ELECTRONICS

Order summary ^ **Rs 2,155.00**

1 50k Variable Resistor Potentiometer Volume Type — Rs 30.00

1 Tb6600 Stepper Motor Driver In Pakistan — Rs 1,550.00

1 Blue 1602 Lcd 16x2 Character Lcd Arduino Display For Arduino — Rs 300.00

Discount code | Apply

Subtotal · 3 items — Rs 1,880.00

“CONCLUSIONS”

- The implemented conveyor and sorting system successfully demonstrated the application of embedded systems in automation.
- Using the **Tiva C TM4C123GH6PM** microcontroller, the system accurately monitored and counted objects using **IR sensors** placed at multiple detection points.
- The integration of a **NEMA 17 stepper motor** with the **TB6600 driver** enabled precise and smooth conveyor movement.
- An **LCD display** provided real-time feedback of item counts and system status, enhancing usability.
- The system was made safer and more reliable with the inclusion of an **emergency stop button** and **overload detection mechanism** using an additional IR sensor.
- Overall, the project showcases a practical approach to low-cost industrial automation using embedded hardware and efficient C programming.

“REFERENCES”

1. CHATGPT
2. Google

“CREDITS”

1. **2023-MC-13**
2. **2023-MC-17**

Both of these helped us with procuring of materials as well as circuit debugging.